NÖRSKA

SCANDINAVIAN-INSPIRED DESIGN

KÄRV

CHA - 006

CUT SHEET

SALES@NORSKAUSA.COM 719-338-7146 8440 CESSNA DR #101. PEYTON. CO 80831.

KÄRV

CHA-006

PRODUCT DESCRIPTION

"Kärv," a minimalist marvel, blends a low profile with a recessed light design, casting an enchanting glow on the bottom rim. Crafted from a single piece of timber, it delivers an unaltered display of natural beauty, making it a refined and captivating addition to any space.

CUP MOUNTING HARDWARE DIAGRAM

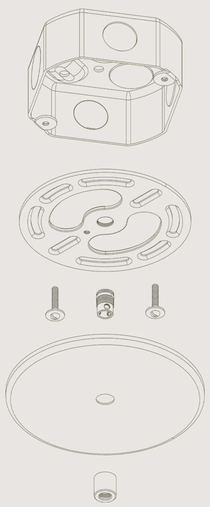

DIMENSIONAL DRAWING

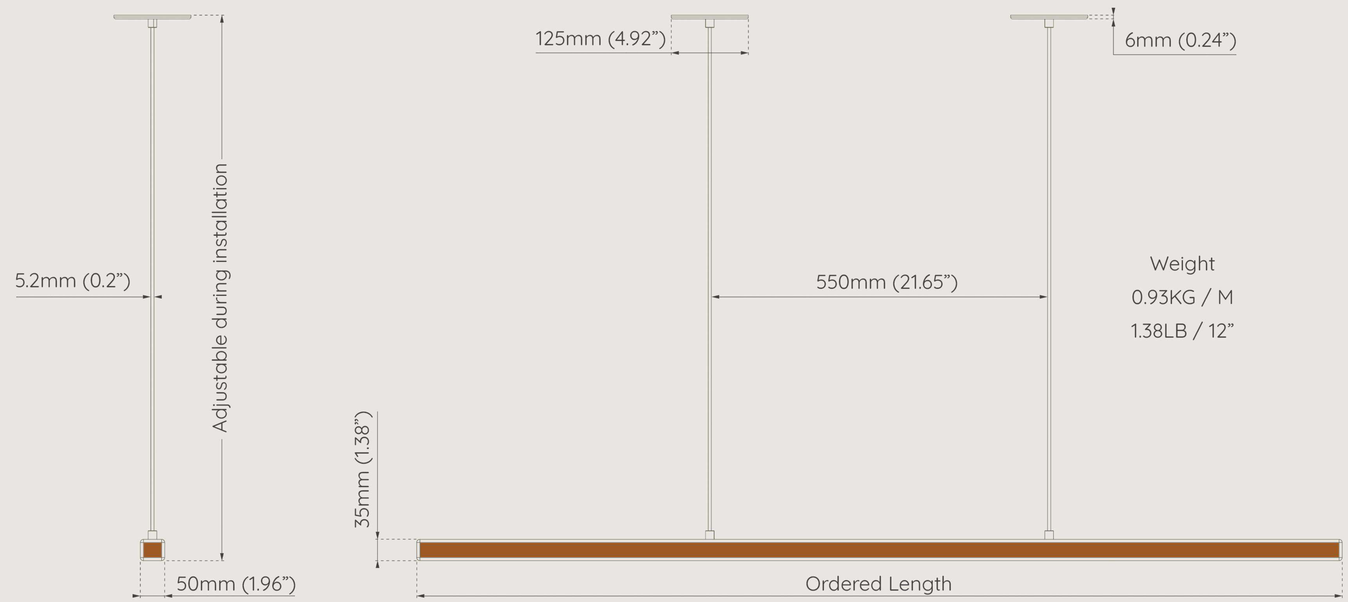

PRODUCT OPTIONS

WOOD TYPE

- White Oak
- Ash
- Hard Maple
- Cherry
- Walnut

LENGTH

- 800mm (31.5")
- 1000mm (39.4")
- 1200mm (47.2")
- 1500mm (59")
- 1800mm (71")
- 2000mm (78.7")
- 2200mm (86.6")
- 2400mm (94.5")

SUSPENSION LENGTH

We provide standard lengths that your installer cuts-down to a final size on-site during installation

MOUNTING STYLE

- Canopy
- Cups (Remote Driver)

WOOD FINISH

- Nörska natural beeswax
- Bleached
- Stained-Blackened
- Flame-Blackened

HARDWARE FINISH

- Powder Coat White
- Brushed Stainless Steel
- Polished Natural Brass
- Black Anodized Aluminum

CORD FINISH

- Black Cotton SVT
- White Cotton SVT

ELECTRICAL

COLOR TEMPERATURE

- 2700K
- 3000K

LUMEN OUTPUT

1320 lm/m (402 lm/ft)

DIMMING

TRIAC Phase-Cut
Optional: Bluetooth, Wi-Fi

WATTAGE

16 W/m (4.88 W/ft)

VOLTAGE

100VAC - 277VAC

CRI

95

CERTIFICATION

UL CERTIFIED SAFETY US-CA E533196

SALES@NORSKAUSA.COM 719-338-7146 8440 CESSNA DR #101, PEYTON, CO

HANDMADE IN THE USA

KÄRV

CHA-006

PRODUCT DESCRIPTION

"Kärv," a minimalist marvel, blends a low profile with a recessed light design, casting an enchanting glow on the bottom rim. Crafted from a single piece of timber, it delivers an unaltered display of natural beauty, making it a refined and captivating addition to any space.

CANOPY MOUNTING HARDWARE DIAGRAM

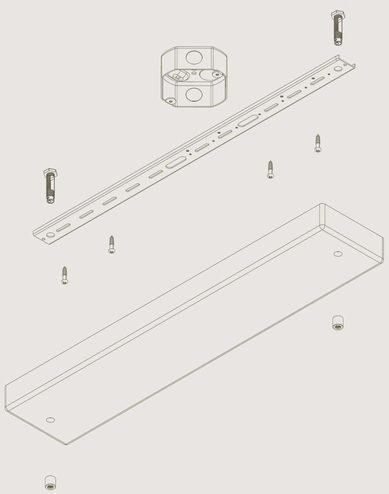

DIMENSIONAL DRAWING

Weight
0.93KG / M
1.38LB / 12”

PRODUCT OPTIONS

WOOD TYPE

- White Oak
- Ash
- Hard Maple
- Cherry
- Walnut

LENGTH

- 800mm (31.5”)
- 1000mm (39.4”)
- 1200mm (47.2”)
- 1500mm (59”)
- 1800mm (71”)
- 2000mm (78.7”)
- 2200mm (86.6”)
- 2400mm (94.5”)

SUSPENSION LENGTH

We provide standard lengths that your installer cuts-down to a final size on-site during installation

MOUNTING STYLE

- Canopy
- Cups (Remote Driver)

WOOD FINISH

- Nörska natural beeswax
- Bleached
- Stained-Blackened
- Flame-Blackened

HARDWARE FINISH

- Powder Coat White
- Brushed Stainless Steel
- Polished Natural Brass
- Black Anodized Aluminum

CORD FINISH

- Black Cotton SVT
- White Cotton SVT

ELECTRICAL

COLOR TEMPERATURE

- 2700K
- 3000K

LUMEN OUTPUT

1320 lm/m (402 lm/ft)

DIMMING

TRIAC Phase-Cut
Optional: Bluetooth, Wi-Fi

WATTAGE

16 W/m (4.88 W/ft)

VOLTAGE

100VAC - 277VAC

CRI

95

CERTIFICATION

UL CERTIFIED SAFETY US/CA E533196

SALES@NORSKAUSA.COM 719-338-7146 8440 CESSNA DR #101, PEYTON, CO

HANDMADE IN THE USA