NÖRSKA

SCANDINAVIAN-INSPIRED DESIGN

FYRA KEPS

CHA - 008

CUT SHEET

SALES@NORSKAUSA.COM 719-338-7146 8440 CESSNA DR #101. PEYTON. CO 80831.

FYRA KEPS

CHA-008

PRODUCT DESCRIPTION

Fyra Keps is a distinguished variation of our flagship Fyra chandelier. Featuring a sleek addition of clean metal accents, Fyra Keps seamlessly marries the elegance of natural wood tones with modern sophistication. This refined blend creates an aesthetic that gracefully merges traditional and contemporary values, making Fyra Keps a standout centerpiece for any space.

CUP MOUNTING HARDWARE DIAGRAM

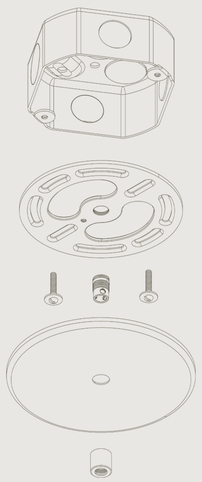

DIMENSIONAL DRAWING

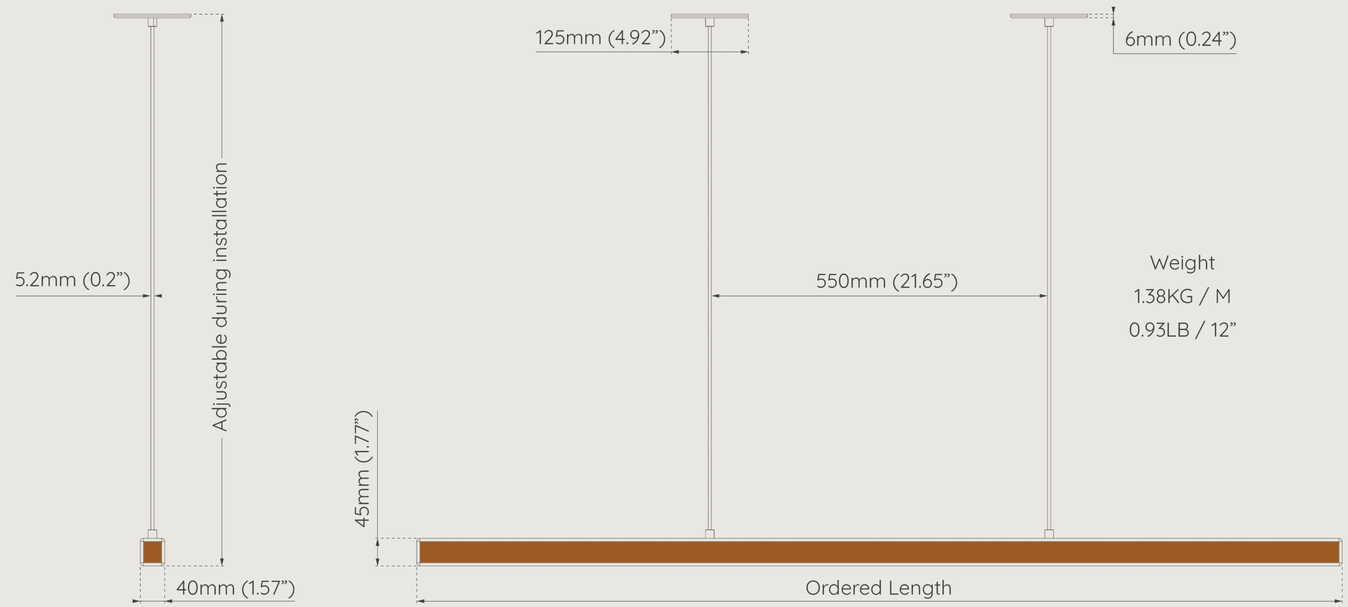

Weight
1.38KG / M
0.93LB / 12”

PRODUCT OPTIONS

WOOD TYPE

- White Oak
- Ash
- Hard Maple
- Cherry
- Walnut

LENGTH

- 800mm (31.5”)
- 1000mm (39.4”)
- 1200mm (47.2”)
- 1500mm (59”)
- 1800mm (71”)
- 2000mm (78.7”)
- 2200mm (86.6”)
- 2400mm (94.5”)

SUSPENSION LENGTH

We provide standard lengths that your installer cuts-down to a final size on-site during installation

MOUNTING STYLE

- Canopy
- Cups

WOOD FINISH

- Nörska natural beeswax
- Bleached
- Stained-Blackened
- Flame-Blackened

HARDWARE FINISH

- Powder Coat White
- Brushed Stainless Steel
- Polished Natural Brass
- Black Anodized Aluminum

CORD FINISH

- Black Cotton SVT
- White Cotton SVT

END STYLE

KEPS

ELECTRICAL

COLOR TEMPERATURE

- 2700K
- 3000K

LUMEN OUTPUT

1320 lm/m (402 lm/ft)

DIMMING

TRIAC Phase-Cut
Optional: Bluetooth, Wi-Fi

WATTAGE

16 W/m (4.88 W/ft)

VOLTAGE

100VAC - 277VAC

CRI

95

CERTIFICATION

UL CERTIFIED SAFETY US CA E533196

SALES@NORSKAUSA.COM 719-338-7146 8440 CESSNA DR #101, PEYTON, CO

HANDMADE IN THE USA

FYRA KEPS

CHA-008

PRODUCT DESCRIPTION

Fyra Keps is a distinguished variation of our flagship Fyra chandelier. Featuring a sleek addition of clean metal accents, Fyra Keps seamlessly marries the elegance of natural wood tones with modern sophistication. This refined blend creates an aesthetic that gracefully merges traditional and contemporary values, making Fyra Keps a standout centerpiece for any space.

CANOPY MOUNTING HARDWARE DIAGRAM

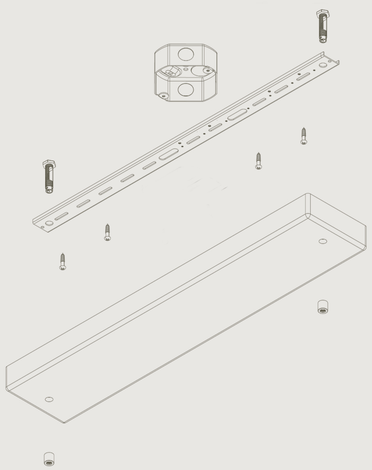

DIMENSIONAL DRAWING

Weight
1.38KG / M
0.93LB / 12”

PRODUCT OPTIONS

WOOD TYPE

- White Oak
- Ash
- Hard Maple
- Cherry
- Walnut

LENGTH

- 800mm (31.5”)
- 1000mm (39.4”)
- 1200mm (47.2”)
- 1500mm (59”)
- 1800mm (71”)
- 2000mm (78.7”)
- 2200mm (86.6”)
- 2400mm (94.5”)

SUSPENSION LENGTH

We provide standard lengths that your installer cuts-down to a final size on-site during installation

MOUNTING STYLE

- Canopy
- Cups

WOOD FINISH

- Nörska natural beeswax
- Bleached
- Stained-Blackened
- Flame-Blackened

HARDWARE FINISH

- Powder Coat White
- Brushed Stainless Steel
- Polished Natural Brass
- Black Anodized Aluminum

CORD FINISH

- Black Cotton SVT
- White Cotton SVT

END STYLE

KEPS

ELECTRICAL

COLOR TEMPERATURE

- 2700K
- 3000K

LUMEN OUTPUT

1320 lm/m (402 lm/ft)

DIMMING

TRIAC Phase-Cut
Optional: Bluetooth, Wi-Fi

WATTAGE

16 W/m (4.88 W/ft)

VOLTAGE

100VAC - 277VAC

CRI

95

CERTIFICATION

UL CERTIFIED SAFETY US CA E533196

SALES@NORSKAUSA.COM 719-338-7146 8440 CESSNA DR #101, PEYTON, CO

HANDMADE IN THE USA