FÄRSK TIO

WAL - 102

CUT SHEET

SALES@NORSKAUSA.COM 719-338-7146 8440 CESSNA DR #101. PEYTON. CO 80831.

FÄRSK TIO

WAL-102

PRODUCT DESCRIPTION

Färsk Tio, Swedish for “fresh ten,” redefines vanity and sconce lighting with a clean, minimal approach. This fixture casts light in both directions, creating an inviting ambiance around its paired setting. The combination of up and down glow achieves a perfect blend of ambient and task lighting, making Färsk Tio a versatile and stylish addition to any space.

MOUNTING HARDWARE DIAGRAM

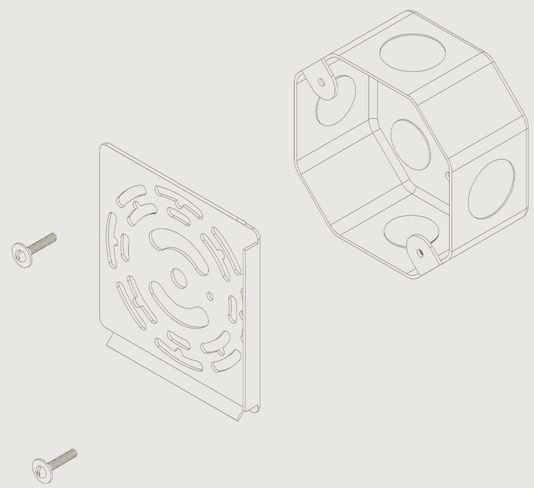

DIMENSIONAL DRAWING

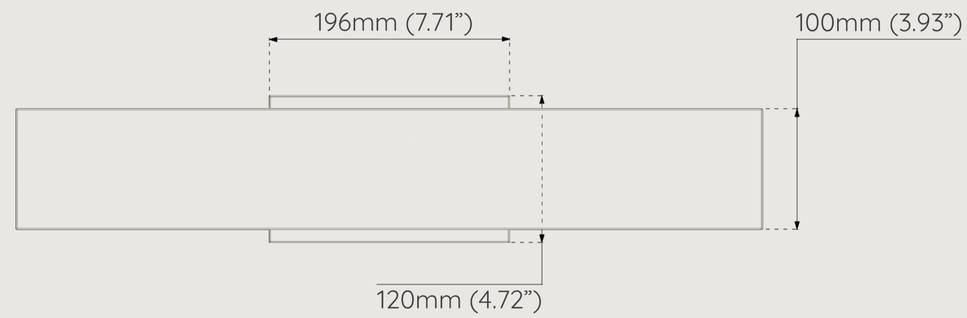

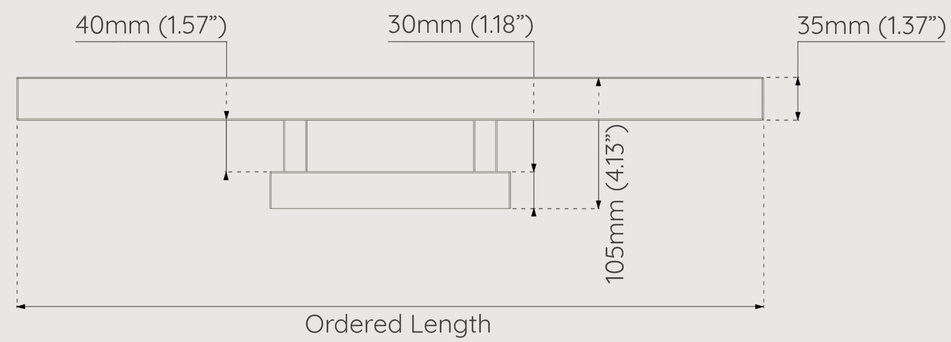

PRODUCT OPTIONS

WOOD TYPE

- White Oak
- Ash
- Hard Maple
- Cherry
- Walnut

LENGTH

- 400mm (15.75”)
- 600mm (23.6”)
- 800mm (31.5”)
- 1000mm (39.4”)
- 1200mm (47.2”)
- 1350mm (53.2”)
- 1500mm (59”)

Metal Accent

- With Metal Accent
- Without Metal Accent

WOOD FINISH

- Nörska natural beeswax
- Bleached
- Stained-Blackened
- Flame-Blackened

HARDWARE FINISH

- Black Anodized Aluminum
- Brushed Stainless Steel
- Polished Natural Brass

END STYLE

OVAL

SQUARE

ELECTRICAL

COLOR TEMPERATURE

- 2700K
- 3000K

WATTAGE

32 W/m (9.76 W/ft)

DIMMING

TRIAC Phase-Cut

LUMEN OUTPUT

2640 lm/m (804 lm/ft)

VOLTAGE

100VAC - 277VAC

CRI

95

CERTIFICATION

SALES@NORSKAUSA.COM 719-338-7030 8440 CESSNA DR #101, PEYTON, CO

HANDMADE IN THE USA