FÄRSK SEKS

WAL - 101

CUT SHEET

SALES@NORSKAUSA.COM 719-338-7146 8440 CESSNA DR #101. PEYTON. CO 80831.

FÄRSK SEKS

WAL-101

PRODUCT DESCRIPTION

Färsk Seks incorporates contemporary Scandinavian design in its handcrafted light body. Swedish for “fresh six,” Färsk Seks is suspended on milled wood posts which seamlessly terminate into its paired wood base. Casting light both vertically and onto the surface below, Färsk Seks achieves a harmonious balance between ambiance and task lighting technique.

MOUNTING HARDWARE DIAGRAM

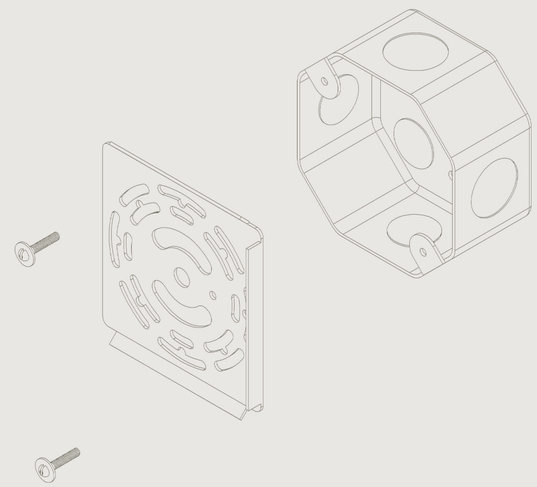

DIMENSIONAL DRAWING

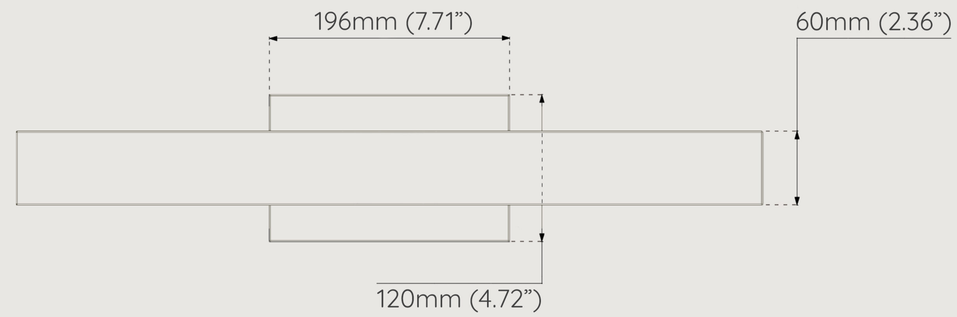

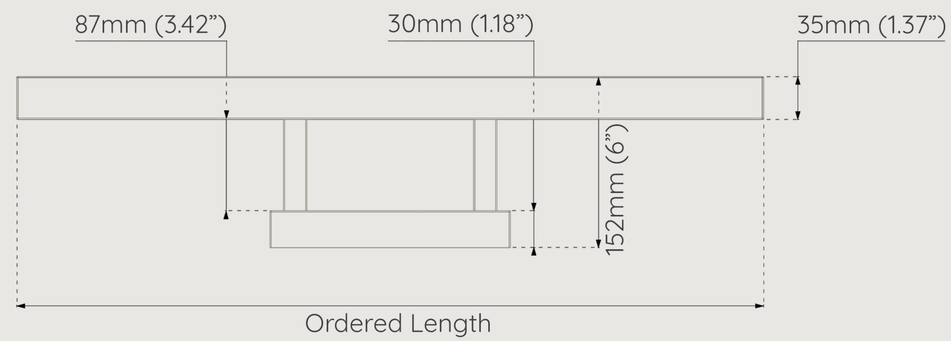

PRODUCT OPTIONS

WOOD TYPE

- White Oak
- Ash
- Hard Maple
- Cherry
- Walnut

LENGTH

- 400mm (15.75”)
- 600mm (23.6”)
- 800mm (31.5”)
- 1000mm (39.4”)
- 1200mm (47.2”)
- 1350mm (53.2”)
- 1500mm (59”)

Metal Accent

- With Metal Accent
- Without Metal Accent

WOOD FINISH

- Nörska natural beeswax
- Bleached
- Stained-Blackened
- Flame-Blackened

HARDWARE FINISH

- Black Anodized Aluminum
- Brushed Stainless Steel
- Polished Natural Brass

END STYLE

OVAL

SQUARE

ELECTRICAL

COLOR TEMPERATURE

- 2700K
- 3000K

WATTAGE

32 W/m (9.76 W/ft)

DIMMING

TRIAC Phase-Cut

LUMEN OUTPUT

2640 lm/m (804 lm/ft)

VOLTAGE

100VAC - 277VAC

CRI

95

CERTIFICATION

SALES@NORSKAUSA.COM 719-338-7030 8440 CESSNA DR #101, PEYTON, CO

HANDMADE IN THE USA